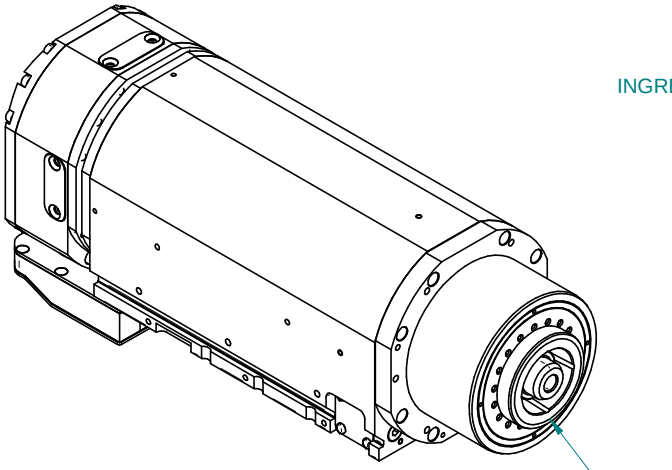

ATTACCO HSK 63E DIN 69893-5
TOOL INTERFACE HSK 63E DIN 69893-5

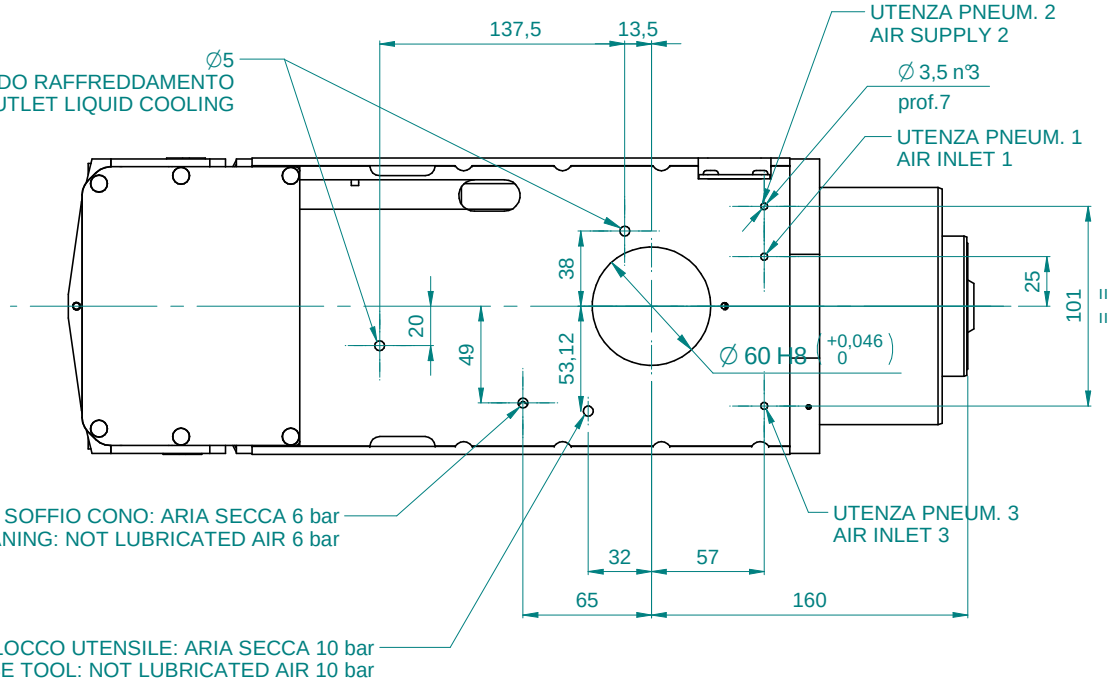

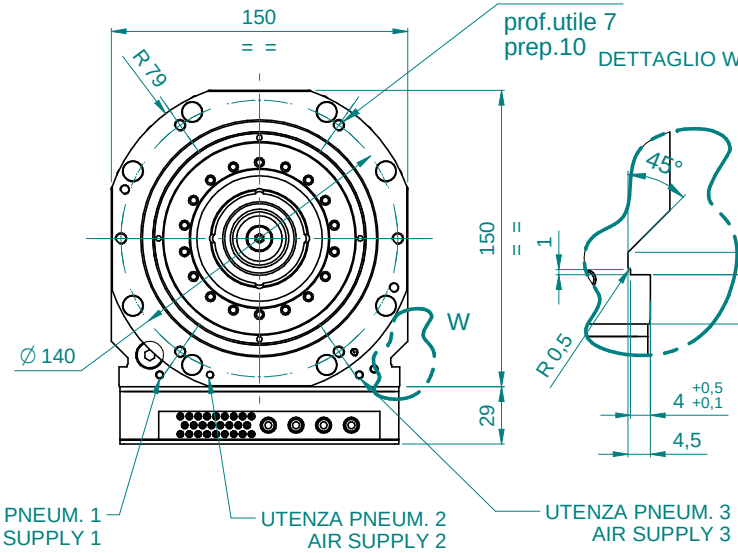

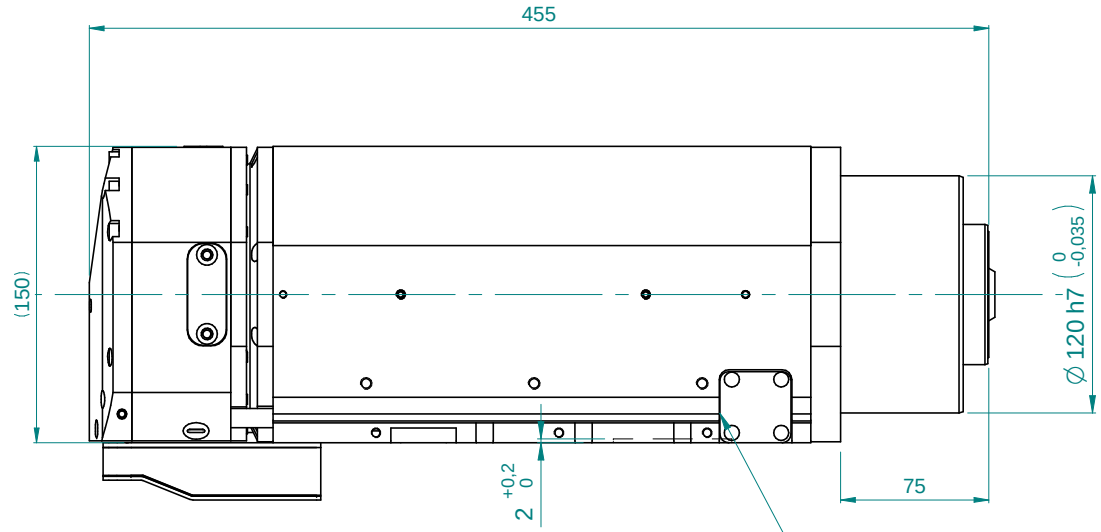

hiteco HIGH TECHNOLOGY COMPONENTS	**ELETM QT-2 13/6 16 63E EN PP**	**QT.X00.L01.00**	**00**	**S020**